ANGLE	± 5°	REV	LOCAS	DESCRIPTION	DESIGN	DATE	卫国峰
X.XXX	± 0.05	01			DRAWN	DATE	尚 伟
X.XX	± 0.15	02			CHECKED	DATE	吴汉学
X.X	± 0.25	03			AUDITED	DATE	龚劲松
X	± 0.50	04			APPROVED	DATE	eric

Specifications/备注（Remark)

1-材料（MATERIAL)

胶芯：PA9T/LCP+30%G. UL94V-0，颜色：黑色

Housing:PA9T/LCP+30%G. UL94V-0,Color:Black

端子：黄铜

Contact：Brass CuZn 36Pb3（C3600）

相配针：∮0. 41mm

Connecting Pin: ∮0. 41mm

2-特性（characteristics):

额定电流：2.00 AMP

Raring Current:2.00 AMP .

接触阻抗：20mΩ MAX.

Contact Resistance:20mΩ MAX .

绝缘阻抗：1000MΩMIN.

Insulating Resistance:1000MΩMIN.

耐电压：AC 500V.

Withstanding Voltage:AC 500V.

温度范围：-40度至+105度

Temperture Range：-40℃to +105℃

ORDERING INFORMATION

R1520-22 XX XX C R XX X X

NO.OF PIGNS PER ROW: 02-40P

INSULATOR MATERIAL: B:PA6T C:PA9T D:LCP

LENGTH OF TERMINAL

PACKING A:PE BAG B:TAPE&REEL C:TUBE D:TUBE+CAP E:TRAY

CONTACT PLATING A0=0.8U" B0=0.8U" ... ... A9=30U" B9=30U" S1=ORDINARY TIN PLATED S2=MATTE TIN PLATED S3=TIN-PLATED HIGH-TEMPERATURE

CONTACT SHAPE: S:STRAIGHT R:RIGHT ANGLE M:SMT

JOURNAL NUMBER 1:TYPE1 2:TYPE2

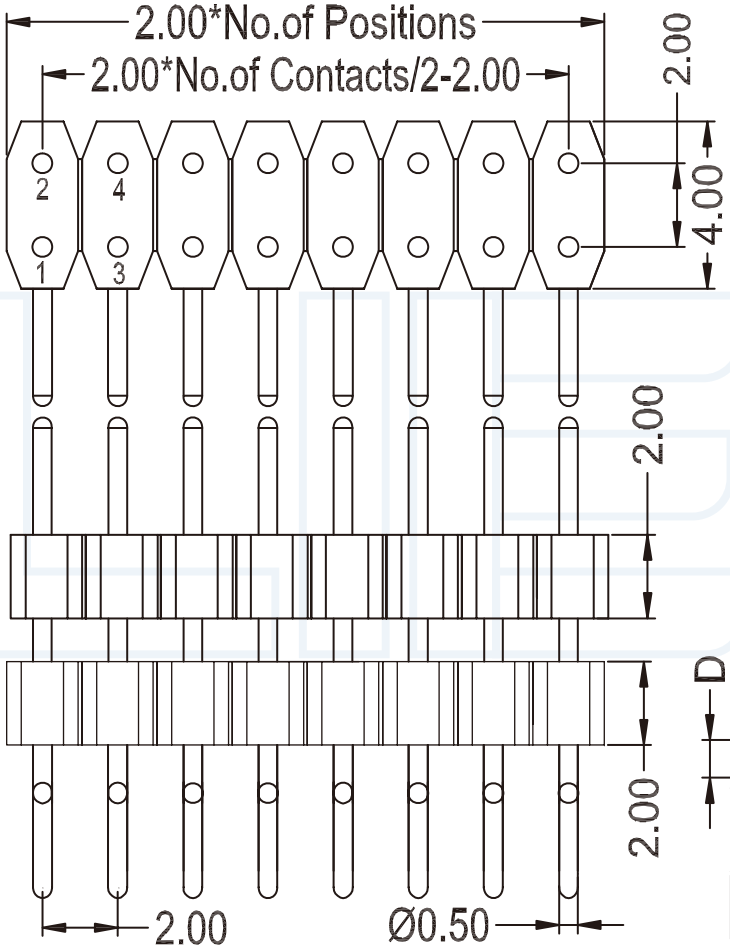

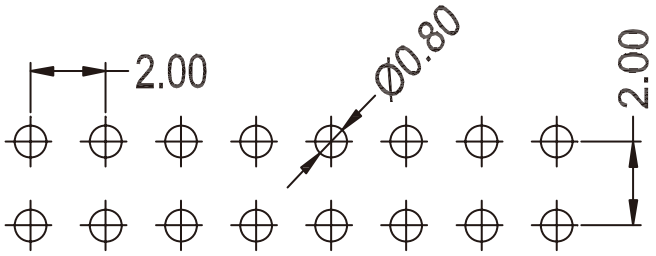

Recommended P.C.B Layout

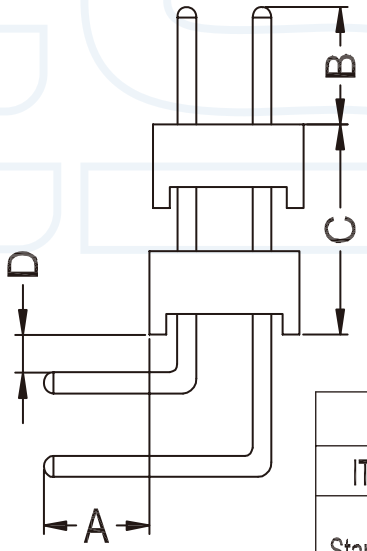

Dimension antitheses list				
ITEM	A	B	D	C
Standard	2.80	4.00	0.10	
	4.00	2.80	0.75	
Alternate				

YLIES® 东莞市瑞翔精密连接器有限公司
DONG GUAN YLIES PRECISE CONNECTOR CO.,LTD
Tel:0769-85381995 / Fax:0769-85493987 / Email: ylies@ylies.cn / Web:www.ylies.cn

TITLE	246-2.0mm 双排双塑圆针 90度	DATE 2018-02-18
PART NO:	R1520-22XXXXCRXXXX	DRAWING NO:

PROJECTON	REV	UNIT	SCALE	PAGE
	A	mm	1:1	1/1